CS578: Internet of Things

Introduction to Arduino Programming

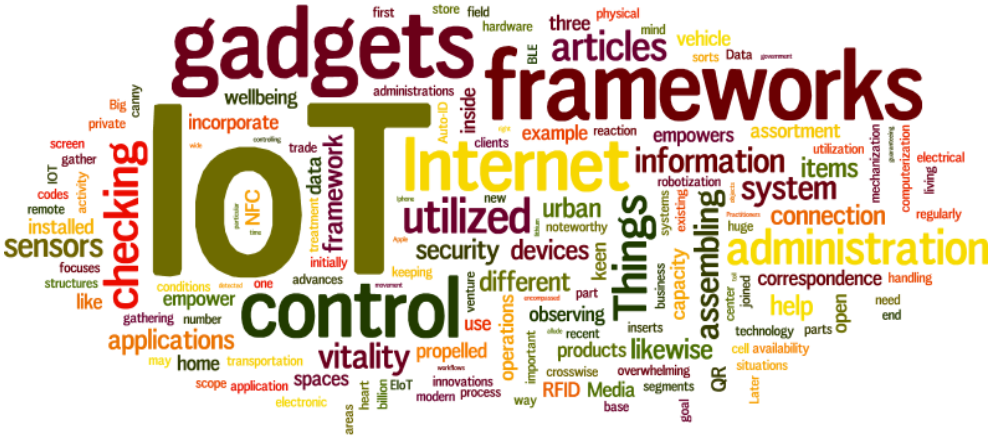
IoT
gadgets
frameworks
Internet
control
administration
information
utilized
Things
assembling
checking
sensors
applications
vitality
likewise
articles
system
connection
devices
security
different
observing
products
spaces
incorporate
wellbeing
framework
NFC
urban
items
assortment
empowers
example
correspondence
help
open
capacity
operations
RFID
Media
innovations
process
modern
EIoT
propelled
home
transportation
application
scope
electronic
empower
gathering
number
conditions
one
advances
keeping
initially
treatment
data
trade
clients
reaction
inside
administrations
hardware
three
physical
vehicle
sorts
Data
first
store
field
mind
BLE
Auto-ID
private
Big
cammy
screen
gather
IOT
activity
codes
remote
installed
focuses
structures
like
heart
billion
areas
goal
QR
Later
way
important
crosswise
overwhelming
segments
base
inserts
recent
technology
parts
cell availability
situations
joined
center
business
systems
existing
robotization
mechanization
computerization
electrical
living
regularly
huge
handling
need
end
noteworthy
new
keen
venture
part
use
recent
overwhelming
workflows
innovations
modern
process
EIoT
billion
heart
areas
goal
base
segments
RFID
Media
crosswise
way
important
operations
observing
products
likewise
vitality
propelled
spaces
home
transportation
application
scope
electronic
may
like
gathering
number
empower
conditions
one
advances
keeping
initially
treatment
data
trade
clients
reaction
inside
administrations
hardware
three
physical
vehicle
sorts
Data
first
store
field
mind
BLE
Auto-ID
private
Big
cammy
screen
gather
IOT
activity
codes
remote
installed
focuses
structures
like
wellbeing
incorporate
example
reaction
empowers
assortment
utilization
mechanization
computerization
electrical
living
regularly
robotization
items
system
connection
administration
correspondence
handling
need
end
open
help
capacity
assembling
Things
keen
urban
noteworthy
new
utilized
security
devices
different
part
use
observing
products
likewise
inserts
recent
technology
parts
cell availability
situations
joined
center
business
systems
existing
QR
Later
way
important
crosswise
overwhelming
segments
base
goal
RFID
Media
innovations
process
modern
EIoT
billion
heart
areas
propelled
vitality

Introduction

- The Arduino Software (IDE) allows you to write programs (i.e. **sketches**) and upload them to your board.

- A sketch is consists of two **mandatory** functions:
  - ✓ **Setup( )** -- it is executed **once**
  - ✓ **Loop( )** -- it is executed **repeatedly**

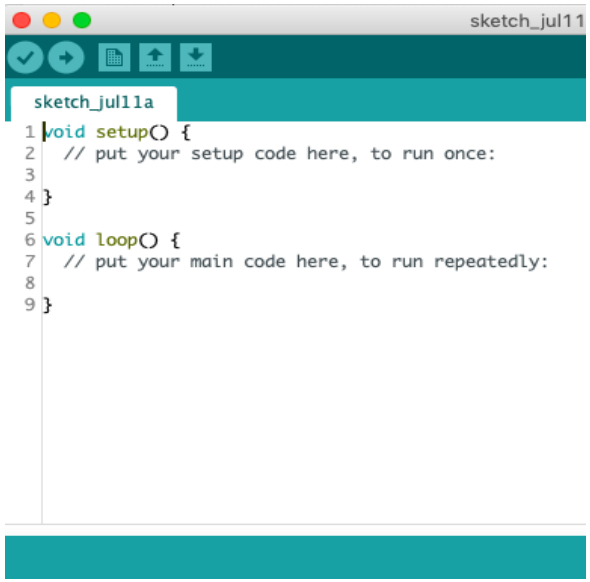

- Setup( ) is used for
  - ✓ initialization of serial communication
  - ✓ defining pinMode
  - ✓ declaring variables

- Loop( ) is used for
  - ✓ writing the main code which has to execute continuously.
  - ✓ e.g. reading inputs from the sensors, triggering outputs to the external device, etc.

Cont…

- **Sketches** are **compiled** by avr-gcc / avr-g++
  - It is based on C/C++ programming language

- So, the program syntax is almost similar to C/C++
  - Supported data types
  - Variables
  - Constants
  - Control structure
  - Looping structure
  - Arrays
  - Strings
  - Function

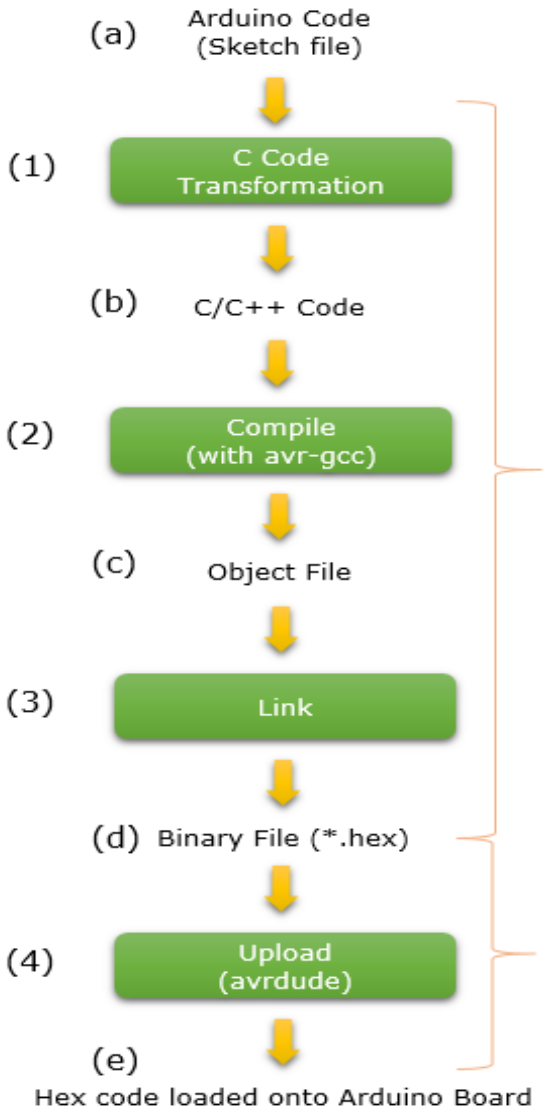

- One important extension is : **Arduino Libraries**
  - Libraries are a collection of code that makes it easy for you to connect to a sensor, display, module, etc.

Variables

Constants

HIGH | LOW
INPUT | OUTPUT | INPUT_PULLUP
LED_BUILTIN
true | false
Floating Point Constants
Integer Constants

Conversion

(unsigned int)
(unsigned long)
byte()
char()
float()
int()
long()
word()

Data Types

array
bool
boolean
byte
char
double
float
int
long
short
size_t
string
String()
unsigned char
unsigned int
unsigned long
void
word

Variable Scope & Qualifiers

const
scope
static
volatile

Utilities

PROGMEM
sizeof()

Operators & Structures

Sketch

loop()
setup()

Control Structure

break
continue
do...while
else
for
goto
if
return
switch...case
while

Further Syntax

#define (define)
#include (include)
/* */ (block comment)
// (single line comment)
; (semicolon)
{} (curly braces)

Arithmetic Operators

% (remainder)
* (multiplication)
+ (addition)
- (subtraction)
/ (division)
= (assignment operator)

Comparison Operators

!= (not equal to)
< (less than)
<= (less than or equal to)
== (equal to)
> (greater than)
>= (greater than or equal to)

Boolean Operators

! (logical not)
&& (logical and)
|| (logical or)

Pointer Access Operators

& (reference operator)
* (dereference operator)

Bitwise Operators

& (bitwise and)
<< (bitshift left)
>> (bitshift right)
^ (bitwise xor)
| (bitwise or)
~ (bitwise not)

Compound Operators

%= (compound remainder)
&= (compound bitwise and)
*= (compound multiplication)
++ (increment)
+= (compound addition)
-- (decrement)
-= (compound subtraction)
/= (compound division)
^= (compound bitwise xor)
|= (compound bitwise or)

Few Built-in Functions

https://www.arduino.cc/reference/en/

- **pinMode (pin, mode)**
  - It configures the specified pin to behave either as input or as output
  - By default the digital pins in Arduino function as input.

  - **pin**: is the number of the pin whose mode needs to be set
  - **mode**: can be INPUT, OUTPUT, INPUT_PULLUP.

```
pinMode(9,OUTPUT);
```

- **digitalReadPin(pin)**
  - Reads the value from a specified digital pin, either HIGH or LOW.

```
val = digitalRead(inPin);
```

- **digitalWrite(pin, value)**
  - Used for output by using the LOW/HIGH logic level (i.e. 0V / 5V)
  - **value**: LOW / HIGH

```
digitalWrite(10,HIGH);
```

- **analogRead(pin)**
  - Access and gets value from a particular Analog pin having 10-bit resolution (i.e. 10-bit ADC)
  - Returns: 0-1023 (integer)
  - Arduino UNO yields a resolution between readings of: 5 volts / 1024 units. It will map input voltages between 0 and the operating voltage(5V or 3.3V) into integer values between 0 and 1023.
  - The input range can be changed using analogReference()

```
val = analogRead(A3);
```

- **analogWrite(pin, value)**
  - Write the analog value (PWM wave) to a pin
  - **value:** it is the duty cycle value between 0 and 255 (as 6 pins).
  - Note: analogRead values go from 0 to 1023, analogWrite values from 0 to 255

```
analogWrite(9, val / 4);
```

Cont…

- **delay(ms)**
  - Pause the program for the amount of time (in millisecond) specified by **ms**

```
delay(1000); // wait for a second
```

- **Serial.begin(speed)**
  - It sets the **speed** in bps (baud rate) for serial data transmission from computer to Arduino board

```
Serial.begin(9600);
```

- **Serial.available ()**
  - Returns: the number of bytes (characters) available to read

```
if (Serial.available() > 0) { }
```

- **Serial.print(value)**
  - Print data to the serial port as human-readable ASCII text
  - Numbers are printed using ASCII character for each digit
  - Floats are printed as ASCII digits (upto 2 decimal places)
  - Bytes are send as a single character
  - Characters and Strings are sent as is.

```
Serial.print("I received: ");
```

- **Serial.print(value, format)**
  - The optional 2nd argument specifies the base (format) to use
  - **format:** BIN / OCT / DEC / HEX

```
Serial.print(i,DEC);
// Print Decimal value of number i
```

- **Serial.println(value) , Serial.println(value, format)**
  - Additionally it returns the number of bytes written

Cont…

- **Serial.read()**
  - Reads incoming serial data.

```
incomingByte = Serial.read();
```

- **Serial.write(val) or .write(str) or .write(buf, len)**
  - Writes binary data to the serial port.
  - This data is sent as a byte or series of bytes; to send the characters representing the digits of a number use the print() function instead.

```
Serial.write(45); // send a byte with the value 45

int bytesSent = Serial.write("hello");  //send the string "hello" and return the length of the string.
```

- **Trigonometry:**
  - **cos()**
  - **sin()**
  - **tan()**

- **Math:**
  - **abs()**
  - **max()**
  - **min()**
  - **pow()**
  - **sq()**
  - **sqrt()**
  - **random()**
  - **randomSeed()**

Example 1: Digital Read-Write

- Objective:
  - Turns on and off a LED connected to digital pin 13, when pressing a pushbutton attached to pin 2.

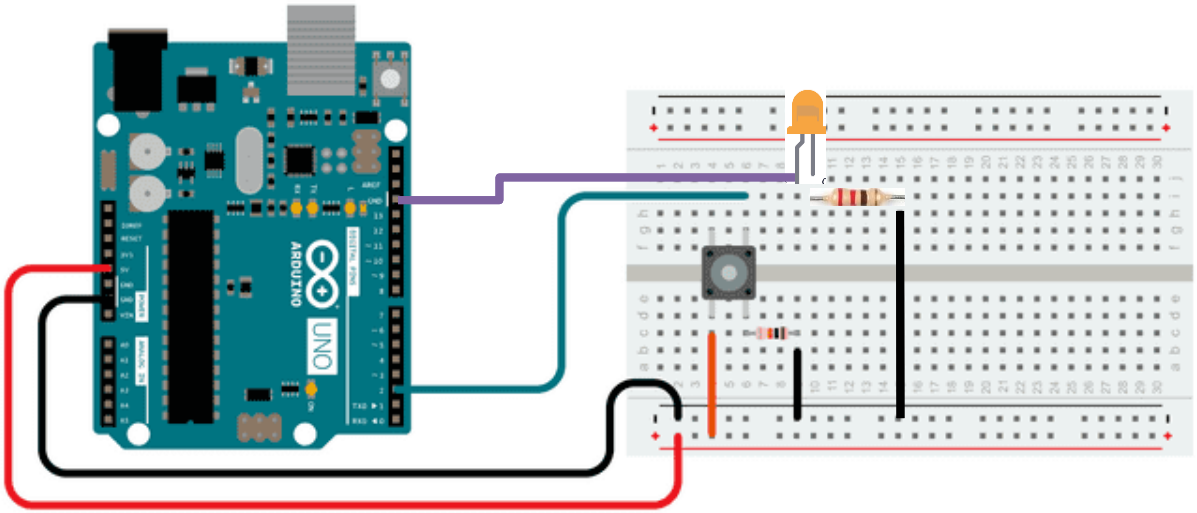

- The circuit:
  - LED attached from pin 13 to ground through 220 ohm resistor
  - One leg of the Pushbutton attached to pin 2
  - That same leg of the button connects through a pull-down resistor (here 10K ohm) to ground.
  - The other leg of the button connects to the 5 volt supply.

Cont…

Button | Arduino 1.8.19 (Windows Store 1.8.57.0)

File Edit Sketch Tools Help

Button §

```
// constants won't change. They're used here to set pin numbers:
const int buttonPin = 2;     // the number of the pushbutton pin
const int ledPin =  13;      // the number of the LED pin

// variables will change:
int buttonState = 0;         // variable for reading the pushbutton status

void setup() {
  // initialize the LED pin as an output:
  pinMode(ledPin, OUTPUT);
  // initialize the pushbutton pin as an input:
  pinMode(buttonPin, INPUT);
}

void loop() {
  // read the state of the pushbutton value:
  buttonState = digitalRead(buttonPin);

  // check if the pushbutton is pressed. If it is, the buttonState is HIGH:
  if (buttonState == HIGH) {
    // turn LED on:
    digitalWrite(ledPin, HIGH);
  } else {
    // turn LED off:
    digitalWrite(ledPin, LOW);
  }
}
```

- When the pushbutton is open (**unpressed**)
  - there is no connection between the two legs of the pushbutton, so the pin is connected to ground (through the pull-down resistor) and we read a LOW.
- When the button is closed (**pressed**)
  - it makes a connection between its two legs, connecting the pin to 5 volts, so that we read a HIGH.

Example 2: Binary Counter in LED

- Requirements:
  - Arduino UNO
  - USB connector
  - Breadboard
  - 4 piece LEDs
  - 4 piece 1K ohm resistor
  - Arduino IDE

- Connection:
  - Place the LED and resistor on breadboard
  - Connect the bradboard power with Arduino
  - Connect the LED with Arduino
  - Connect the Arduino board with PC/Laptop

- Arduino Programming
  - Install IDE in PC/Laptop
  - Run the IDE
  - Select the Arduino board in IDE
  - Select the connected COM port
  - Start writing new sketch

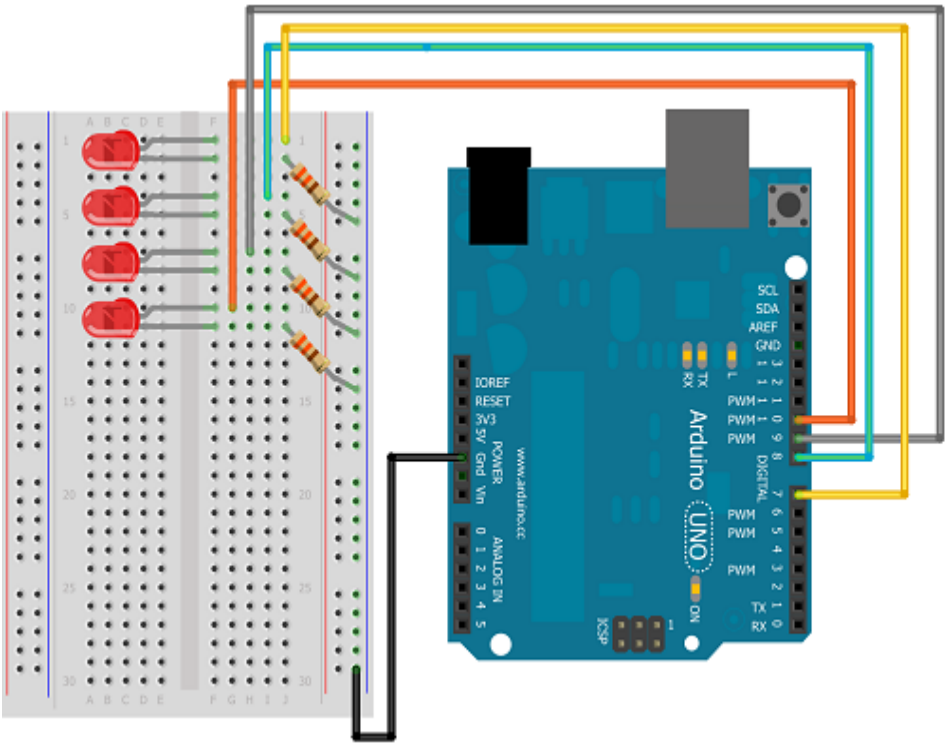

Sketch of Binary Counter

BinaryCountInLED

```
int animationSpeed = 0;
int ledPin10 = 10;
int ledPin11 = 11;
int ledPin12 = 12;
int ledPin13 = 13;

void setup() {  // put your setup code here, to run once:
  Serial.begin(9600); //initialize serial communication
  int i=0;
  int ledPin = 10;
  for (i=0;i<4;i++)
  {
    pinMode(ledPin,OUTPUT);
    digitalWrite(ledPin,LOW); // make LED1 to LED4 OFF
    ledPin = ledPin + 1;
  }
  Serial.println("Binary count in LEDs");
  Serial.println("On the serial monitor");
}

void loop() {  // put your main code here, to run repeatedly:
  animationSpeed = 4000;
  int i;   int number = 0;
  Serial.println("Decimal and Equivalent Binary");
  for (i=0;i<16;i++)  {
      Serial.print('\t');
      Serial.print(i,DEC); // Print Decimal number
      Serial.print('\t');
```

sketch_sep17a §

```
      Serial.println(i,BIN); // Print binary equivalent

      number = i&1; //check if bit 1 is 1 by ANDing with 1
      if(number)
        digitalWrite(ledPin10,HIGH);
      else
        digitalWrite(ledPin10,LOW);

      number = i&2; //check if bit 2 is 1 by ANDing with 2
      if(number)
        digitalWrite(ledPin11,HIGH);
      else
        digitalWrite(ledPin11,LOW);

      number = i&4; //check if bit 3 is 1 by ANDing with 4
      if(number)
        digitalWrite(ledPin12,HIGH);
      else
        digitalWrite(ledPin12,LOW);

      number = i&8; //check if bit 4 is 1 by ANDing with 8
      if(number)
        digitalWrite(ledPin13,HIGH);
      else
        digitalWrite(ledPin13,LOW);
      delay(animationSpeed);
  }
}
```

Demo on Binary Counter in LED

Read Analog Voltage

- ADC provide digital output which is proportional to analog value.

- To know what is input analog value, we need to convert the received digital value back to analog value through program.

Aout = digital value * (Vref/2^n – 1)

- Example:
  - digital value = 512 and ADC is 10-bit with 5V Vref.
  - What analog voltage is giving the respective digital value?

Aout = 512 * (5 V / 1023) = 2.5 V

digitalValue = analogRead (pin)

pin - number of analog pin which we want to read
digitalValue: 0 – 1023

Example: Read Analog Voltage

```
// select the input pin for the potentiometer
int sensorPin = A0;
// variable to store the value coming from the sensor
int digitalValue = 0;
float analogVoltage = 0.00;
 void setup() {
        Serial.begin(9600);
}
 void loop() {
       // read the value from the analog channel
       digitalValue = analogRead(sensorPin);
       Serial.print("digital value = ");
        //print digital value on serial monitor
       Serial.print(digitalValue);
       //convert digital value to analog voltage
       analogVoltage = (digitalValue * 5.00)/1023.00;
       Serial.print("  analog voltage = ");
       Serial.println(analogVoltage);
       delay(1000);
}
```

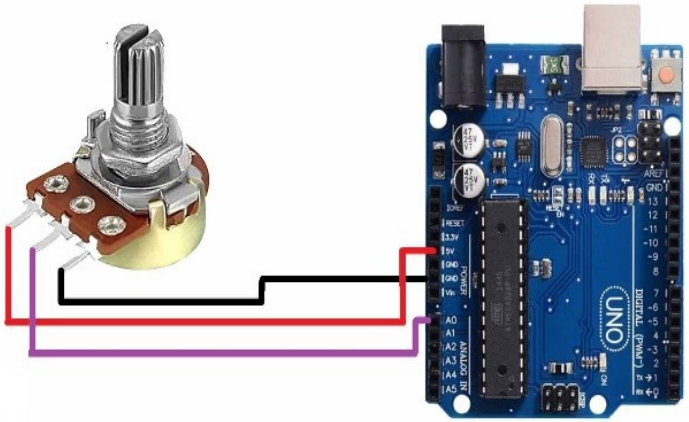

Pin 1 & 3 of Potentiometer: connect them to Vcc and GND of Arduino

Pin 2 of Potentiometer: Connect with A0 pin of Arduino

Example: Read Analog Voltage

```
// select the input pin for the potentiometer
int sensorPin = A0;
// variable to store the value coming from the sensor
int digitalValue = 0;
float analogVoltage = 0.00;
 void setup() {
        Serial.begin(9600);
}
 void loop() {
        // read the value from the analog channel
        digitalValue = analogRead(sensorPin);
        Serial.print("digital value = ");
         //print digital value on serial monitor
        Serial.print(digitalValue);
        //convert digital value to analog voltage
        analogVoltage = (digitalValue * 5.00)/1023.00;
        Serial.print("  analog voltage = ");
        Serial.println(analogVoltage);
        delay(1000);
}
```

COM4 (Arduino/Genuino Uno)

```
digital value = 0  analog voltage = 0.00
digital value = 0  analog voltage = 0.00
digital value = 30  analog voltage = 0.15
digital value = 66  analog voltage = 0.32
digital value = 171  analog voltage = 0.84
digital value = 275  analog voltage = 1.34
digital value = 331  analog voltage = 1.62
digital value = 400  analog voltage = 1.96
digital value = 459  analog voltage = 2.24
digital value = 475  analog voltage = 2.32
digital value = 482  analog voltage = 2.36
digital value = 502  analog voltage = 2.45
digital value = 517  analog voltage = 2.53
digital value = 543  analog voltage = 2.65
digital value = 588  analog voltage = 2.87
digital value = 595  analog voltage = 2.91
digital value = 598  analog voltage = 2.92
digital value = 736  analog voltage = 3.60
digital value = 939  analog voltage = 4.59
digital value = 974  analog voltage = 4.76
digital value = 998  analog voltage = 4.88
digital value = 1014  analog voltage = 4.96
digital value = 1019  analog voltage = 4.98
digital value = 1022  analog voltage = 5.00
```

Autoscroll

Write Analog Value

- Digital control is used to create a square wave, a signal switched between ON and OFF.

- This on-off pattern can simulate voltages in between Vcc and GND.
  - ✓ by changing the portion of the time the signal spends ON versus the time that the signal spends OFF

- The analogWrite(value) is on a scale of 0 – 255.
  - ✓ Zero value means 0% duty cycle, 255 value means 100% duty cycle.

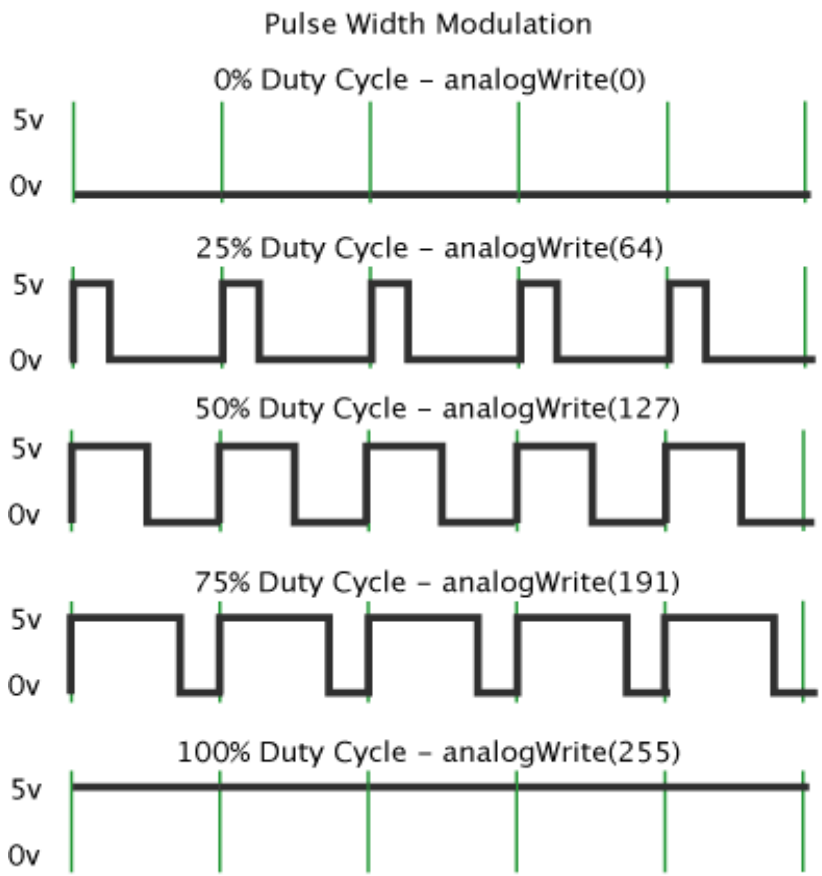

Example: Write Analog Value

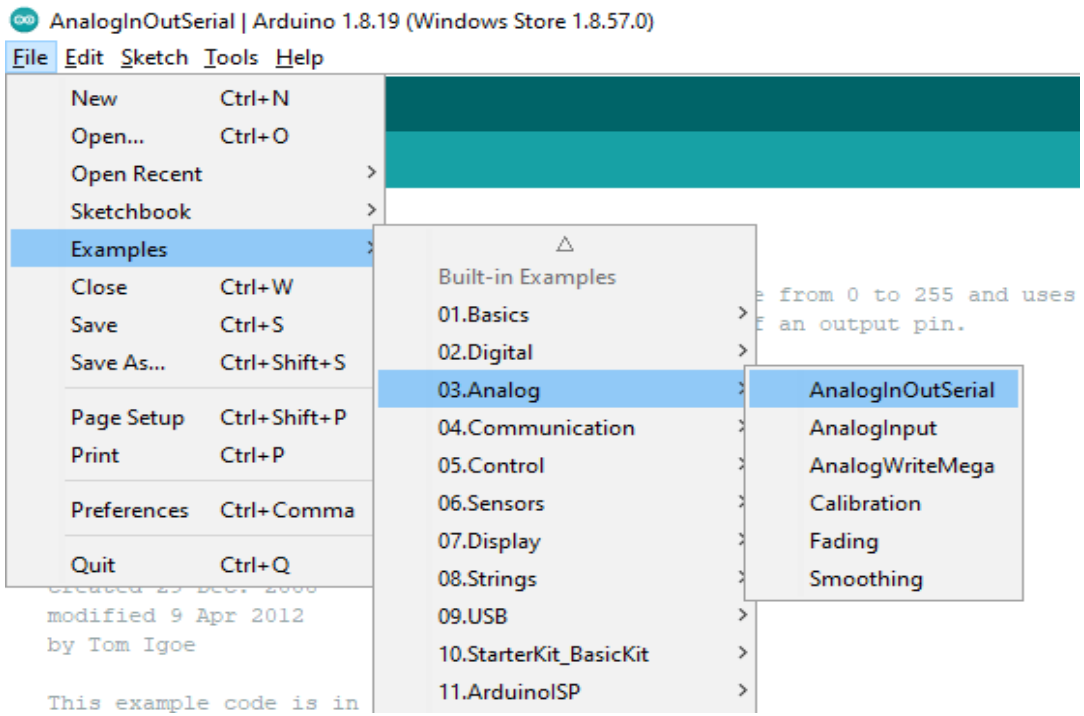

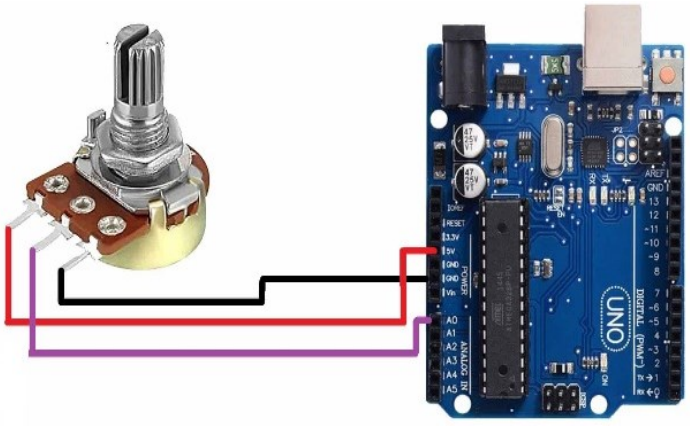

Pin 1 & 3 of Potentiometer: connect them to Vcc and GND of Arduino

Pin 2 of Potentiometer: Connect with A0 pin of Arduino

One **LED** connected with digital pin 9 and grounded through 220 ohm or 1 Kohm resistor

OUTPUT: LED Dimming by Potentiometer

Lessons Learned

- ✓ What is Arduino Programming
- ✓ Syntax of Arduino Programming
- ✓ Supporting variable, structures, operators
- ✓ In-Built Arduino Function Library
- ✓ Programming example - LED blink
- ✓ Program and Demo on binary counter in LED
- ✓ Analog Read and Write

Thanks!